PRESSURE REGULATOR WITHOUT AUXILIARY ENERGY

VALFONTA

EXCESS PRESSURE VALVE (PRESSURE RELIEF VALVE) MODEL S1

MAIN CHARACTERISTICS

The S1 model is self-operated pressure excess valve.

This series of regulators is suitable for steam, compressed air, gases and liquids.

It has a very quick response to the demand.

Globe valve, single seat.

The stem is sealed by the double layer bellow. It is made in stainless steel 316Ti.

To avoid any damage on the bellows, S1 series is provided of an anti rotation system.

The diaphragm is enhanced with an intermediate lining.

Regulation range between 0,5 and 15 barg with different actuators. Valve opens when the upstream pressure increases. Maximum inlet pressure 15 barg.

Fluids
Liquids, compressed air, neutral gases and steam.

Nominal pressure	PN25 – PN40 Class 150 – Class 300
Sizes	DN15 to DN150
Body material	Nodular Iron GGG40.3 Carbon steel A216 WCB Stainless steel A351 CF3M
Connections	Flanged DIN PN16-PN40 Flanged ANSI 150 / 300 Threaded BSP / NPT, consult
Trim material	Stainless steel AISI 316L
Diaphragm Material	NBR -20ºC to 80ºC EPDM -40ºC to 125ºC EPDM + PTFE 125ºC to 220ºC

Other configurations:

- Kv or CV reduced.
- A control line kit for pressure tapping directly at the body is available on request (optionally with or without condensation tank) for set points > 1 bar.
- Condensation tank (pot) is available and necessary for steam or fluid upper to 125 ºC, to protect the diaphragm against excessive temperature.

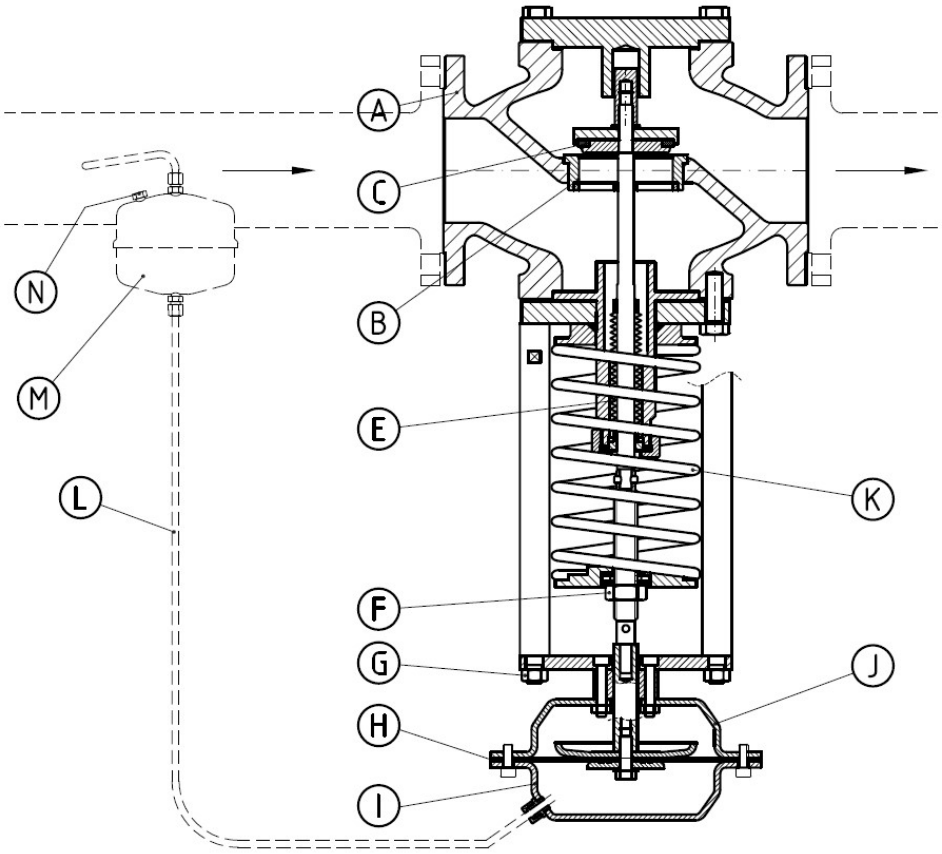

A – Body valve
B – Seat
C – Seal
E – Bellows
F – Regulating nut
G – Nut
H – Diaphragm
I – Actuator casing (Upper)
J – Actuator casing (Lower)
K – Springs
L – Impulse pipe
M – Tank (only for steam)
N – Cap

OPERATION

To control the pressure with the excess pressure valve S1 model, the diaphragm (H) is compressed by the springs (K) through the adjusting nut (F).
The valve is always closed upstream pressure = downstream pressure.

When upstream pressure arrives to the diaphragm via external control line (L), and rises above the adjusted set point, valve opens proportionally to the change in pressure. This set point can be adjusted with the adjusting nut (F).

The valve opens when inlet pressure increases.

Standard installation when temperature is upper 0ºC

Another option for liquids and neutral gases until 80 ºC

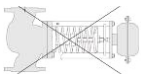

This position is not admitted

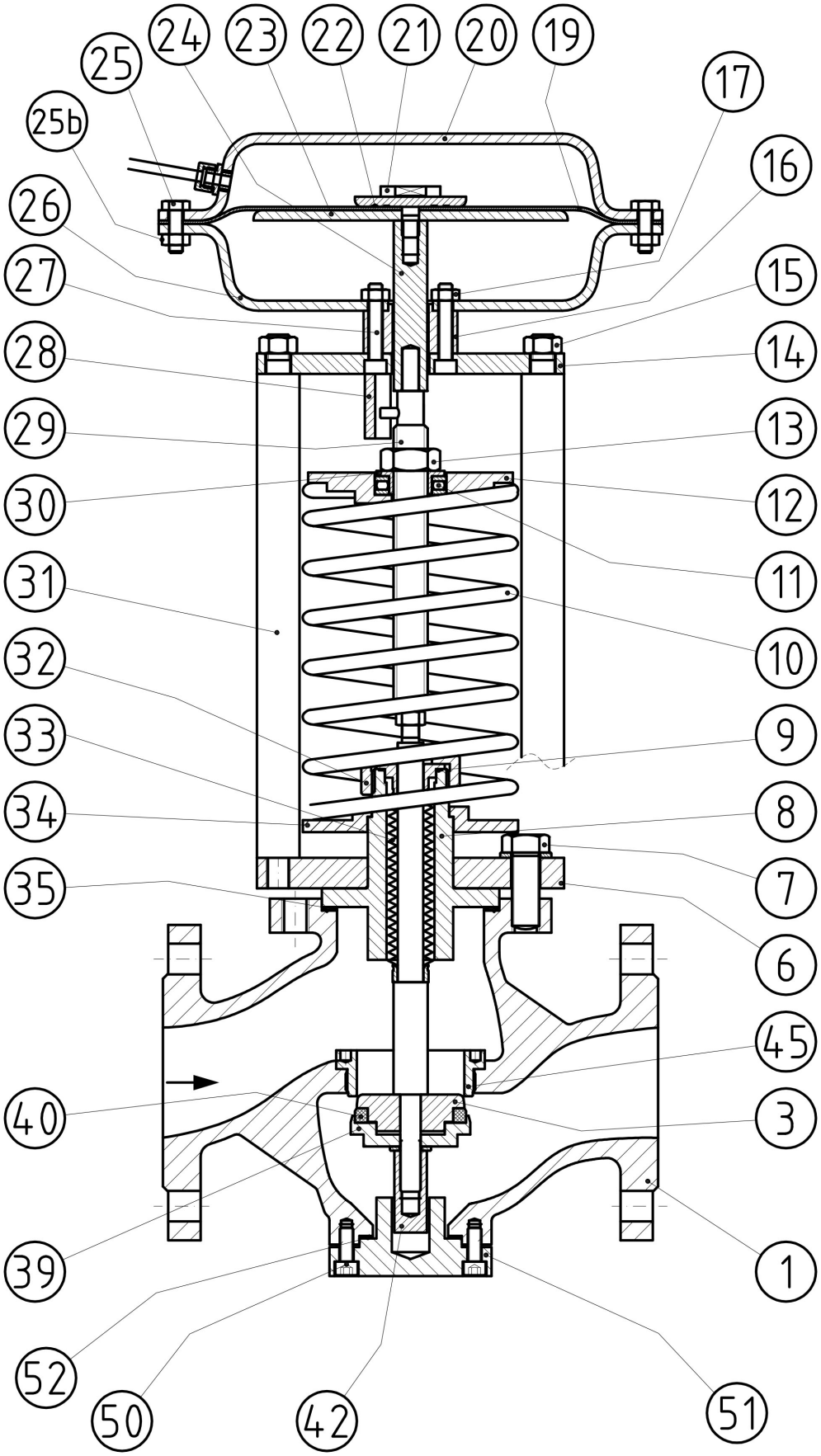

DN15 to DN100

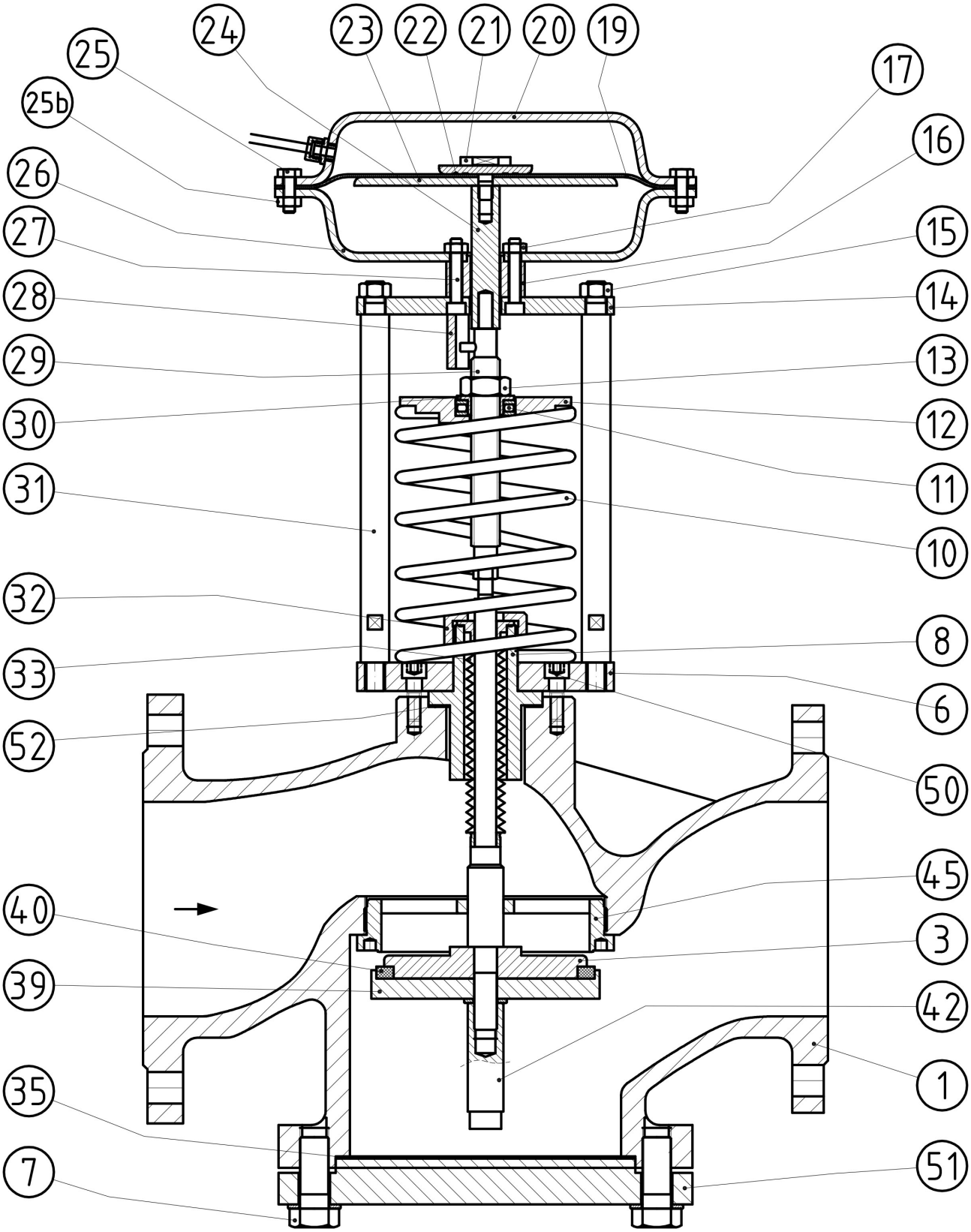

DN125 and DN150

Ref	Description	Material	Ref	Description	Material
1	Body	Nodular Iron EN-JS1049 (GGG40.3) Bronze RG10 Carbon Steel 1.0619 (A216 WCB) Stainless steel 1.4408 (A351 CF3M)	23	Diaphragm plate	1.1191 - Carbon steel
			24	Diaphragm stem	1.1191 - Carbon steel
			25	Screw	A-2 Stainless steel
			25b	Nut	A-2 Stainless steel
3	Lower support seal	Stainless steel 1.4404 - 316L	26	Actuator casing (lower)	1.0335 (Steel sheet with epoxy paint) or Stainless steel sheet AISI 316
6	Cover	1.1191 - Carbon steel 1.4404 – Stainless steel AISI 316L	27	Allen screw	8.8 - Carbon steel
7	Screw	8.8 - Carbon steel A-2 Stainless St. (A-4 optionally)	28	Antirotation system	1.1191 - Carbon steel
8	Bellow guide	1.0570 or 1.1191 - Carbon steel 1.4404 – Stainless steel AISI 316L	29	Regulation stem	1.4301 (Stainless steel AISI 304)
9	O-ring	Viton	30	Guide ball bearing	1.4307 (Stainless steel AISI 304L)
10	Springs	1.0904 (Spring Carbon steel 55 Si 7)	31	Column	1.1191 - Carbon steel
11	Ball bearing	1.3505 (Bearing steel 100 Cr 6)	32	Nut bellow	1.1191 - Carbon steel
12	Upper support springs	1.1191 - Carbon steel	33	Bellow	1.4404 (Stainless steel AISI 316Ti)
13	Adjusting nut	8.8 - Carbon steel	34	Lower support springs	1.1191 - Carbon steel
14	Support plate	1.1191 - Carbon steel	35	Gasket	Graphite with metal
15	Nut M12	8.8 - Carbon steel	39	Support seal	1.4404 – Stainless steel AISI 316L
16	Support screws M8	8.8 - Carbon steel	40	Seal	Graphited PTFE (others on request)
17	Nut M8	8.8 - Carbon steel	42	Nut	A2-70 (x2)
18	Coupling	Brass	45	Seat	1.4404 – Stainless steel AISI 316L
19	Diaphragm	EPDM or EPDM+PTFE	50	Allen screw	Steel 8.8 / Stainless steel A2-70
20	Actuator casing (upper)	1.0335 (Steel sheet with epoxy paint) or Stainless steel sheet AISI 316	51	Cover	1.4404 – Stainless steel AISI 316L
21	Diaphragm screw	1.4301 (Stainless steel AISI 304)	52	Gasket	Graphite with metal
22	O-ring	Viton			

Technical data

Nominal pressure	PN16-PN25-PN40 or CLASS 150-CLASS 300		
Nominal size	DN15 to DN50	DN65 to DN80	DN100
Max. permissible differential pressure Δp	16 bar	12 bar	10 bar
Max. permissible temperature: body	Refer to technical sheet HT-101		
Max. permissible temperature: plug	PTFE+GR: 220ºC EPDM, FPM: 150ºC NBR: 80ºC	PTFE+GR: 220ºC EPDM, FPM: 150ºC NBR: 80ºC	
Max. permissible temperature: actuator	Diaphragm EPDM till 125ºC Diaphragm EPDM+PTFE and condensation tank till 180ºC		

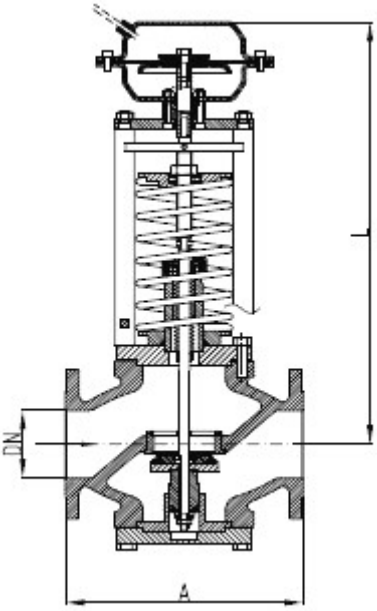

Dimensions, weight and Kv value

DN	15	20	25	32	40	50	65	80	100	125	150
Kv (m³/h)	3.5	5	9	13.5	22	32	57	82	115	190	240
A EN (mm)	130	150	160	180	200	230	290	310	350	400	480 *
A ANSI150 (mm) (inches)	-	-	184 7,25″	-	222 8,75″	254 10″	276 10,9″	298.5 11,75″	352.5 13,88″	-	451 17.75″
A ANSI300 (mm) (inches)	-	-	197 7,76″	-	235 9,25″	267 10,51″	292 11,5″	317.5 12,50″	-	-	-
L (mm)	440	445	450	455	463	475	560	560	575	600	640
Weight (kg.)	20	22	24	28	32	35	52	57	68	85	105

* 450mm under request

Approx. Downstream pressure ranges (D)

Range (bar g)	DN15 a DN50	DN65 a DN100	DN125 a DN150
0,5 - 1,5	295	295	350
1 - 3	255	255	295
2 - 5	230	230	255
4 - 8	175	175	230
7 - 12	-	175	175
7 - 15	175	consult	Consult

Approximate diameter of the recommended actuator (mm)

Typical installation

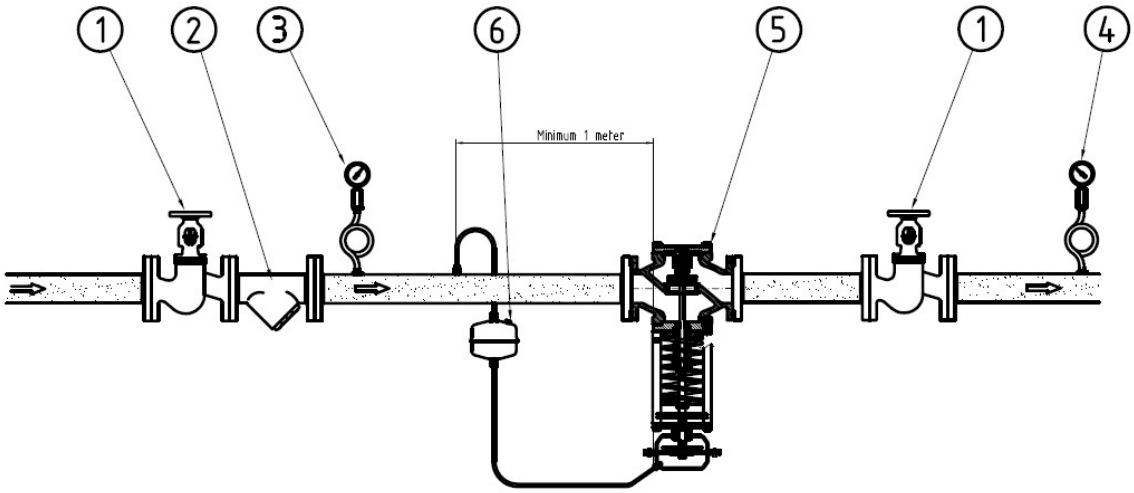

1.- Check valve
2.- Filter
3.- Pressure gauge (inlet pressure)
4.- Pressure gauge (outlet pressure)
5.- Excess pressure valve S1
6.- Tank (if necessary)