SELF-OPERATED PRESSURE REGULATORS

EXCESS PRESSURE VALVE MODEL PRV55

PRODUCT FEATURES

PRV55 model is a self-operated pressure excess valve, fully balanced.

Maintains line pressure to a stable requested value.

When upstream pressure rises above adjusted set point, the valve opens proportionally.

Easy to adjust and doesn't need any maintenance.

Maximum inlet pressure 16 bar.

Pressure range 0,01 a 8 barg.

Temperature range -10 to 180 ºC.

Fluids
Specially designed for gases, to control low outlet pressure. Liquids and gases of group 1 and 2.
Steam, compressed air, fuel-oil, water, nitrogen, neutral gases, …

Body material → Stainless steel Aisi 316L
→ Bronze RG10 (*)

Trim material → Stainless steel Aisi 316L

Connections → Threaded BSP or NPT
→ Flanges DIN or ANSI
→ Clamp(*)

(*) consult

More common applications

Chemical laboratory installations, sanitary plants, compressed air, sprinkler systems, fuel-oil, steam, heat exchangers, steam plants, stills, chemical laboratories, cylinders and vulcanized, dry cleaner's, laundries,...

Special features

External control line could be replaced by internal set (not for steam), stainless steel actuator, special soft-seals,…

Characteristics

Easy to adjust, Doesn´t need any maintenance, internal design conceived to provide an effective circulation of the fluid, all the valves have been degreased.
Special Kv available.

Classification according pressure equipment Directive, 2014/68/UE

Fluid	Chart	PN	Size	Category	CE Marked
Gases and liquids group 2	7	PN25	DN15 – DN25	Apar 3-art 3	Not required
Gases and liquids group 1	6	PN25	DN15 – DN25	Apar 3-art 3	Not required

	Descripción	Material		Descripción	Material
1	Body	Stainless steel Aisi 316L	21	Lower Cover	Stainless steel 316L
2	Seal screw	Stainless steel 316L	22	Gasket	Viton
3	Seal	Graphited PTFE	23	Nut	Stainless steel A-2
4	Gasket	PTFE	24	M8 Screw	Stainless steel A-2
5	Seat	Stainless steel 316L	25	Nut KM-6	Steel
6	Gasket	PTFE	26	O-ring	NBR / Vitón
7	Valve cover	Steel 1.1141	27	Support spring	1.0035 sheet steel galvanized
8	Gasket	PTFE	28	Regulation spring	Spring steel 52SiCrNi5
9	Upper Actuator	1.0035 sheet steel epoxy painted	29	Spring cover	Steel 1.1191 Epoxy Painted
10	Lower Actuator	1.0035 sheet steel epoxy painted	30	Regulation screw	Galv. Steel 1.1191
11	Stem	Stainless steel 316L	31	Regulation nut	Galv. Steel 1.1191
12	Bushing Guide	Stainless steel 316L	32	Spring guide	Galv. Steel 1.1191
13	Guide Stem	Stainless steel 316L	33	Screw	Stainless steel A2-70
14	Allen screw	Stainless steel A2-70	34	Nut	Stainless steel A2-70
15	Gasket	Graphited PTFE	35	Lower support dia.	Stainless steel 316L
17	Support seal	Stainless steel 316L	36	Diaphragm	EPDM / EPDM+PTFE
18	Guide seal	Stainless steel 316L			
				Recommended spare parts	

METHOD OF FUNCTION

The excess pressure valves PRV55 model work direct action principle. Upstream pressure reaches the valve and moves the piston and seal assembly opening the valve. This pressure is fully balanced by the piston and in the pressure less state the valve is closed by the force of the regulating spring (28). When upstream pressure arrives to the diaphragm via external control line (optionally internal), and rises above the adjusted set point, valve opens proportionally to the change in pressure.

It is recommended to leave between 0,5 and 1 meter until check valve for a better compensation.

To decrease outlet pressure, the regulating screw (30) is should be turn clockwise.

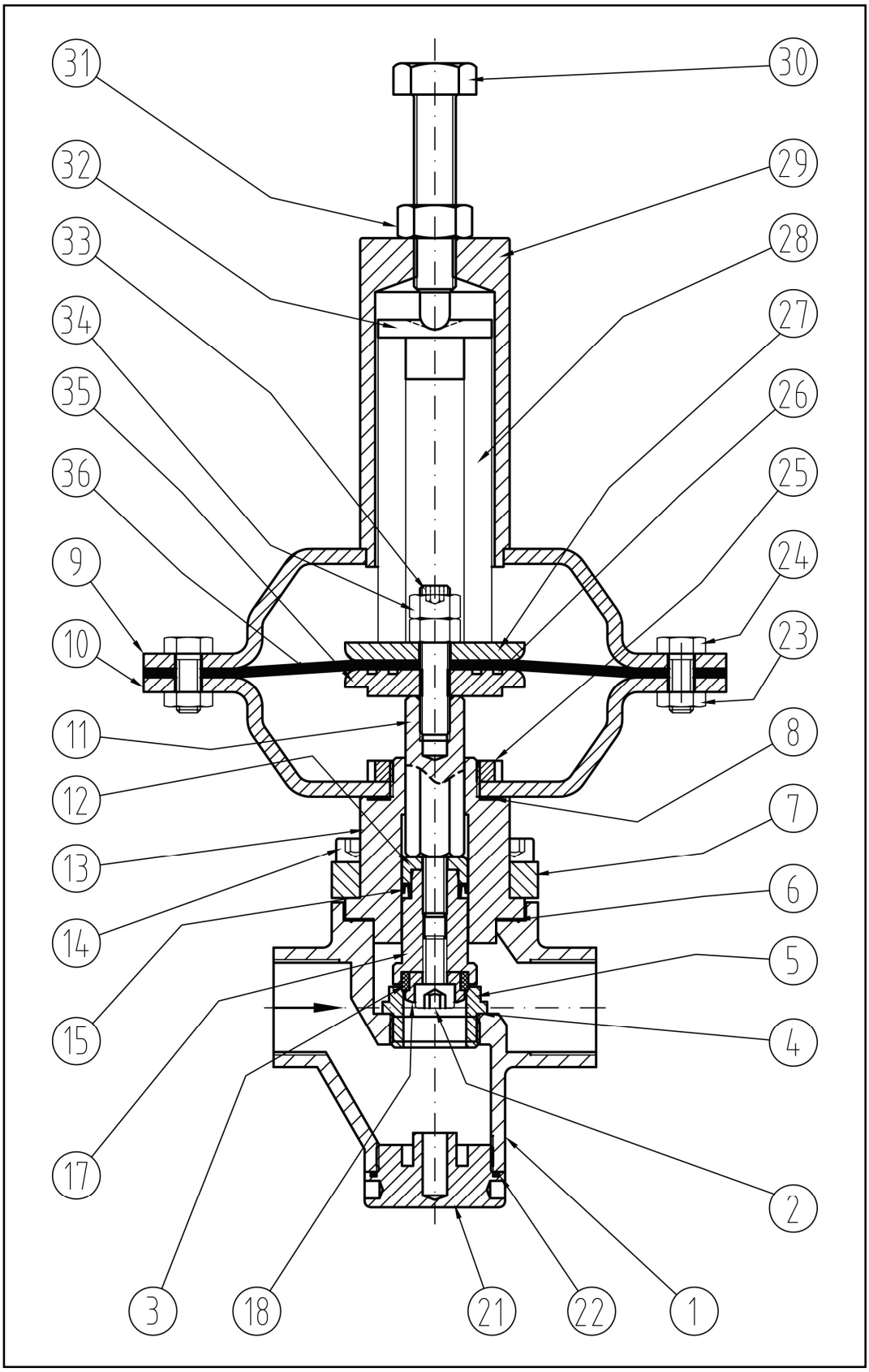
31
30
32
29
33
28
34
27
35
26
36
25
9
24
10
23
11
8
12
7
13
6
14
5
15
4
17
2
3
18
21
22
1

DRAWING INSTALLATION

TYPICAL INSTALLATION FOR LIQUIDS AND GASES.

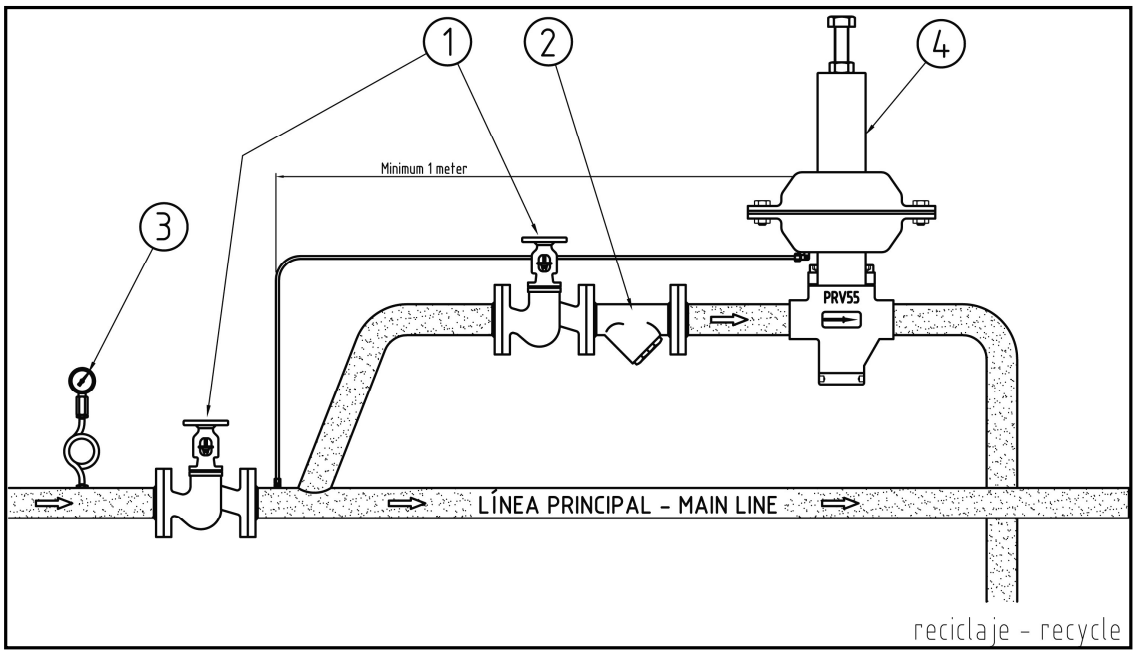

1, 1a y 1b → Check valves
2 → filter
3 → Inlet pressure gauge
4 → Excess pressure valve PRV55
5 → Condensating tank

PRV55 valve should be installed in horizontal pipe and respecting the fluid flow direction must match the arrow on the valve body.

Steam installations, the actuator must be installed in low position. Condensating tank is essential when temperatures above 120ºC to protect the diaphragm from overheating. The tank is always placed in the highest point of the pipe.

The strainer (item 2) must be installed upstream of the regulator to protect seal and diaphragm and avoid excessive maintenance. Remember to leave enough space to remove and clean it.

The distance between connection control line and valve would be, at least, 6xDN.

External control line it's necessary for liquids with temperatures above 125ºC and steam, and recommended for liquids below 125ºC.
For gases isn't necessary because valve mounts the internal control line.

Pressure Range and actuator size

D (mm)	Range	units
350	consult	mbar
295	10 – 200	mbar
230	100 – 1000	mbar
230	0,5 – 2	bar
175	1 – 4	bar
175	3 – 8	bar

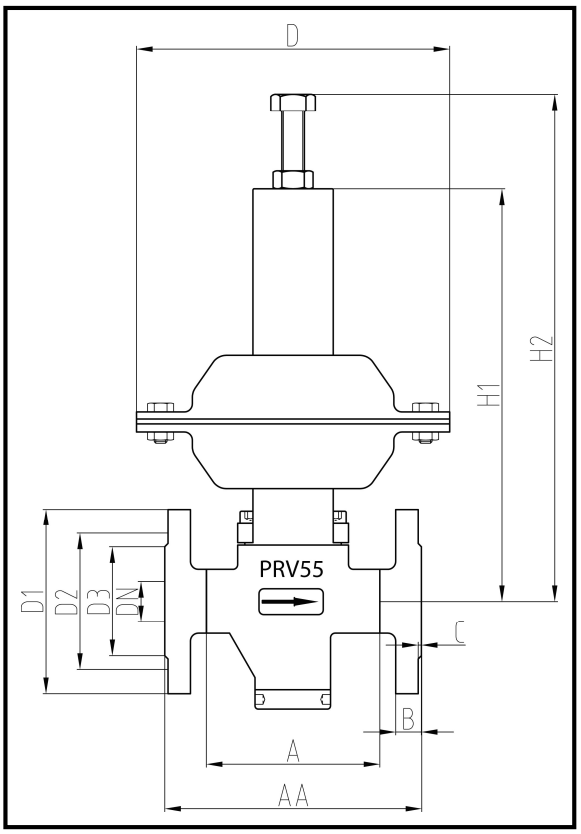

DN	½"	¾"	1"	15	20	25	15	20	25
Connection	Threaded			Flanged EN PN16			Flanged ANSI CL150		
Kv value	2	2.5	3.5	2	2.5	3.5	2	2.5	3.5
A or AA	108	108	108	130	150	160	184	184	184
H1	258								
H2	320								
D1	-	-	-	95	105	115	89	98	108
D2	-	-	-	65	75	85	60.5	70	79.5
D3	-	-	-	45	58	68	35	43	51
B	-	-	-	16	16	16	12	12	12
C	-	-	-	2	2	2	2	2	2
D	175 – 195 – 230 – 295 – 350 (Depends outlet pressure)								
Nº holes	-	-	-	4	4	4	4	4	4
Ø hole	-	-	-	14	14	14	16	16	16
Weight (Kg)	2.5	2.5	2.5	5	5	5	5	5	5