SELF-OPERATED PRESSURE REGULATORS

PRESSURE REDUCING VALVE MODEL PRV45

PRODUCT FEATURES

Self-actuating pressure reducing valve balancing by diaphragm used to provide a constant downstream still there being oscillations in **the** inlet pressure.

Easy to adjust and doesn't need any maintenance.

Maximum inlet pressure 16 bar.

Pressure range 0,01 a 8 barg.

Temperature range -30 to 80 ºC (NBR)
Temperature range -10 to 125 ºC (EPDM)
Temperature range -10 to 150 ºC (VITON-FPM)

Fluids
Specially designed for gases at low outlet pressure.
Group 1 and 2 liquids and gases.
Steam, compressed air, nitrogen, fuel-oil, water, neutral gases, …

Body material → Stainless steel Aisi 316L
→ Super Duplex (*)

Trim material → Stainless steel Aisi 316L

Cover material → Stainless steel Aisi 316L

Connections → Threaded BSP / NPT
→ Flanges DIN or ANSI
→ Clamp, SW or BW (consult)

More common applications

Chemical laboratory installations, sanitary plants, compressed air, sprinkler systems, …

Characteristics

It is easy to adjust; it does not need any maintenance. It is possible to install it in any position; its internal design is conceived to provide an effective circulation of the fluid.

Special features

- Internal control line could be replaced by external set (mandatory for low temperature steam)
- Stainless steel actuator, special soft-seals,…
- Special Kv available.

Classification according pressure equipment Directive, 2014/68/UE

Fluid	Chart	PN	Size	Category	CE Marked
Gases and liquids group 2	7	PN25	DN15 – DN25	Article 4, paragraph 3	Not required
Gases and liquids group 1	6	PN25	DN15 – DN25	Article 4, paragraph 3	Not required

	Descripción	Material		Descripción	Material
1	Body	Stainless steel A351 CF3M (316L)	21	Lower Cover	Stainless steel A351 CF3M (316L)
2	Seal screw	Stainless steel 1.4404 - 316L	22	Gasket	NBR EPDM / Viton / Graphited PTFE
3	Seal	NBR EPDM / Viton / Graphited PTFE	23	Nut	Stainless steel A2-70
5	Seat	Stainless steel 1.4404 - 316L	24	Screw	Stainless steel A2-70
6	Gasket	PTFE	25	Screw	Stainless steel A2-70
8	Gasket	PTFE	27	Support spring	1.0035 sheet steel galvanized
9	Upper Actuator	1.0035 sheet steel epoxy painted / Stainless steel A351 CF3M (316L)	28	Regulation spring	Spring steel 52SiCrNi5 Epoxy Painted
10	Lower Actuator	1.0035 sheet steel epoxy painted / Stainless steel A351 CF3M (316L)	29	Spring cover	Stainless steel A351 CF3M (316L)
11	Stem	Stainless steel 1.4404 - 316L	30	Regulation screw	Stainless steel 1.4404 - 316L
12	Bushing Guide	Stainless steel 1.4404 - 316L	31	Regulation nut	Stainless steel A2-70
13	Bonnet	Stainless steel A351 CF3M (316L)	32	Spring guide	Galvanized Steel 1.1191
14	Allen screw	Stainless steel A2-70	33	Screw	Stainless steel A2-70
15	Gasket	NBR EPDM / Viton / Graphited PTFE	34	Nut	Stainless steel A2-70
17	Stem	Stainless steel 1.4404 - 316L	35	Lower support dia.	Stainless steel 1.4404 - 316L
18	Guide seal	Stainless steel 1.4404 - 316L	36	Diaphragm	NBR / EPDM / EPDM+PTFE
19	Seal spring	Stainless steel 316			
				Recommended spare parts	

METHOD OF FUNCTION / HOW IT WORKS

PRV working method is due the direct action principle. Inlet pressure comes into the valve and closes it due the difference between different sections where pressure applies.

When spring (28) is compressed by regulating screw (30),then all stem-seal (33, 11, 17 and 3) opens the valve and allows the regulation.

When any downstream valve is closed and flow=0, PRV will absorb oscillations and maintain outlet pressure according to regulation. The valve closes when the downstream pressure exceeds the regulating set pressure.

It is recommended to leave between 0,5 and 1 meter until check valve for a better compensation.

To increase outlet pressure, the regulating screw (30) is should be turn clockwise.

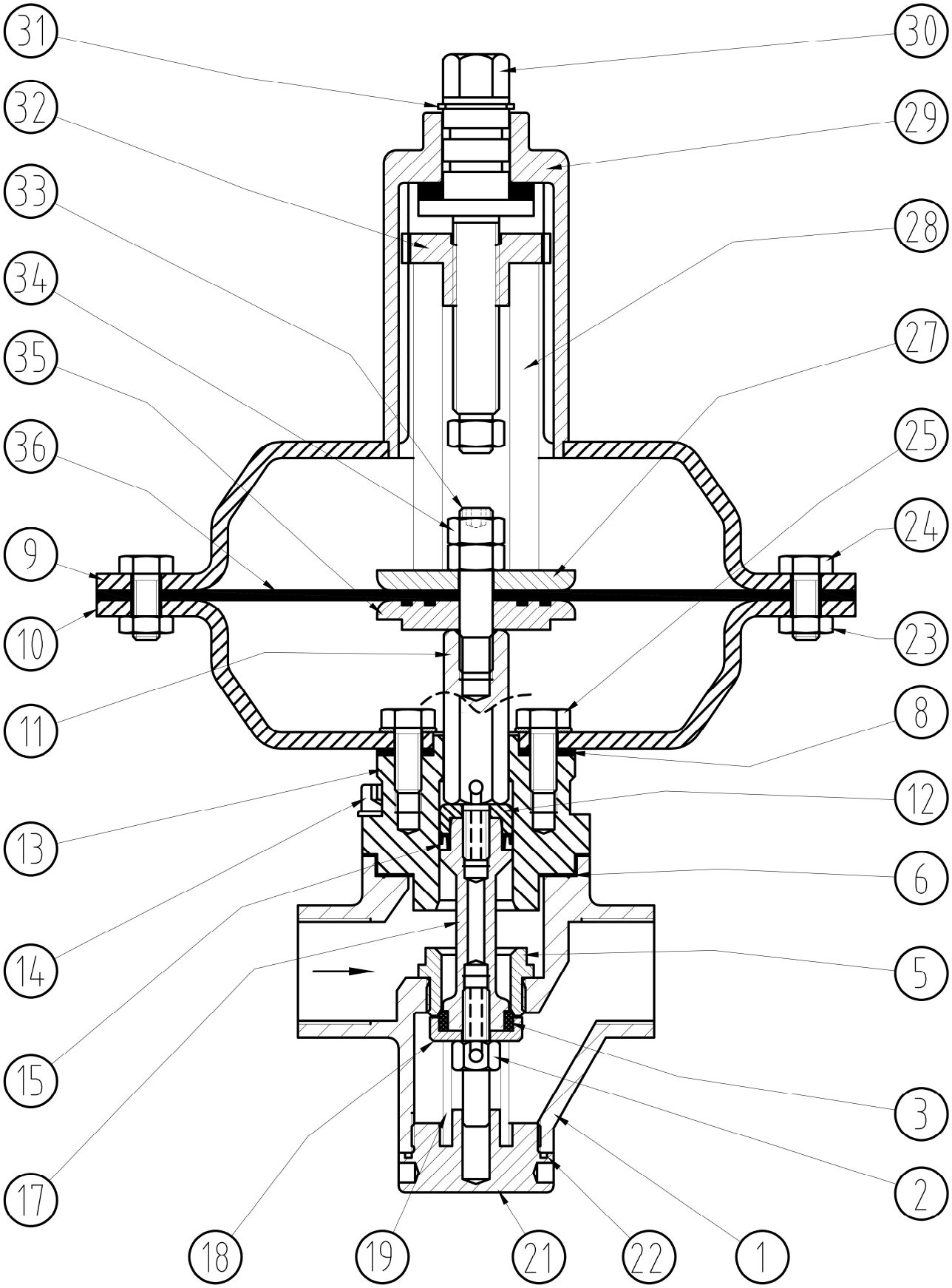
31
30
32
29
33
28
34
27
35
25
36
24
9
23
10
11
8
12
13
6
14
5
15
3
17
2
18
19
21
22
1

DRAWING INSTALLATION

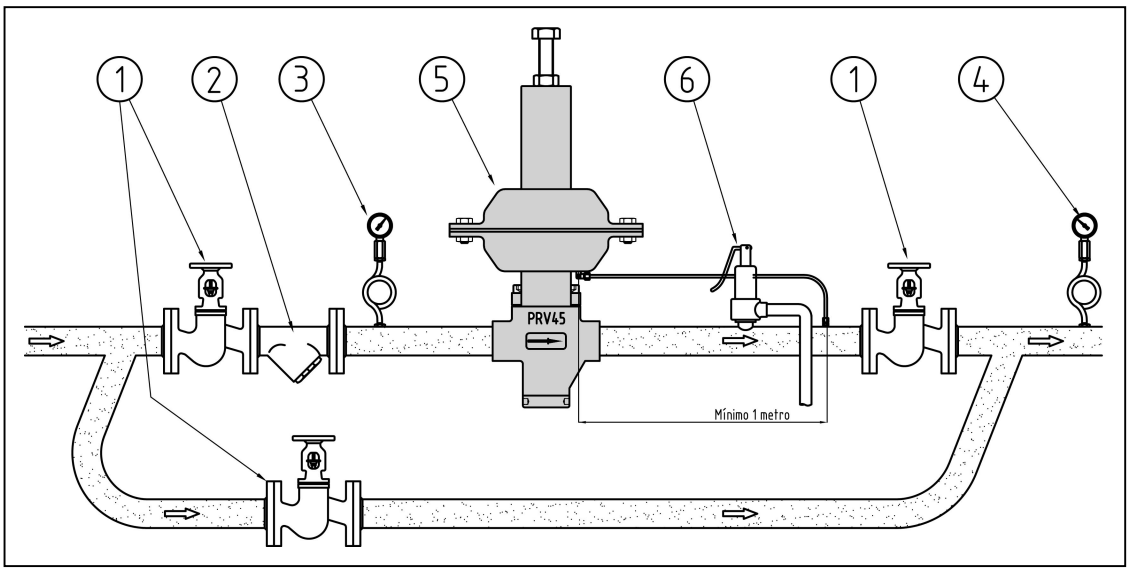

TYPICAL INSTALLATION FOR LIQUIDS AND GASES
(External control line is optional. As standard, internal control line)

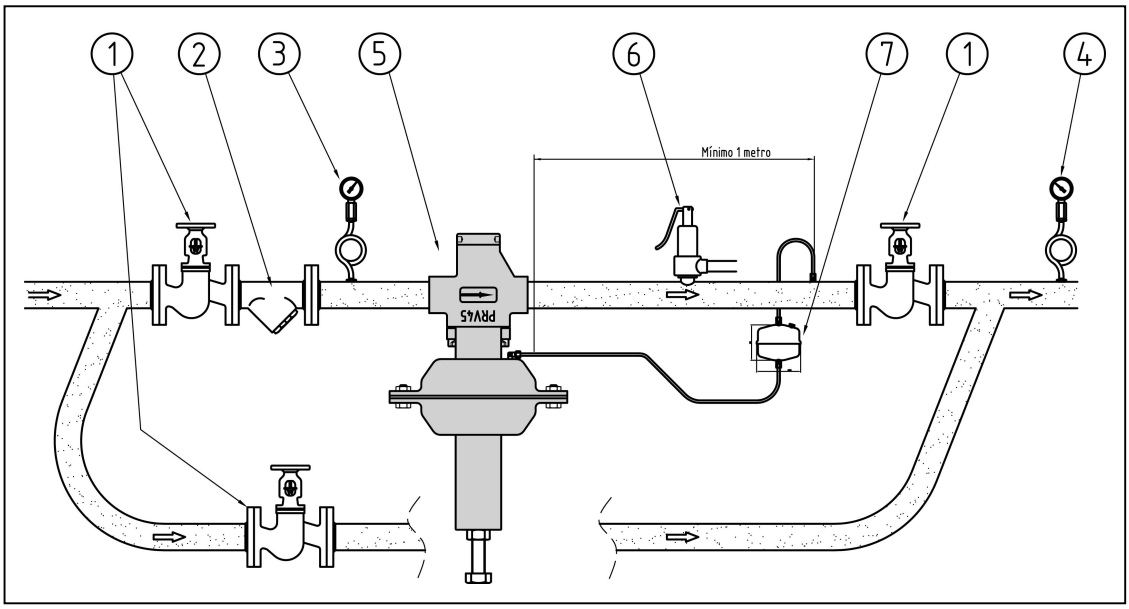

TYPICAL INSTALLATION FOR STEAM (WITH CONDENSATING POT).

1, 1a y 1b → Check valves 2 → filter 3 → Inlet pressure gauge
4 → Outlet pressure gauge 5 → Pressure reducing valve PRV 6 → Safety valve

PRV45 valve should be installed in horizontal pipe and respecting the fluid flow direction must match the arrow on the valve body.

Steam installations, the actuator must be installed in low position. Condensating tank is essential when temperatures above 120ºC to protect the diaphragm from overheating. The tank is always placed in the highest point of the pipe.

The strainer (item 2) must be installed upstream of the regulator to protect seal and diaphragm and avoid excessive maintenance. Remember to leave enough space to remove and clean it.

The distance between connection control line and valve would be, at least, 6 x DN.

Pressure Range and actuator size

D (mm)	Range	unit
350	consult	mbar
295	10 – 200	mbar
230	0,1 – 2	bar
175	1 – 8	bar

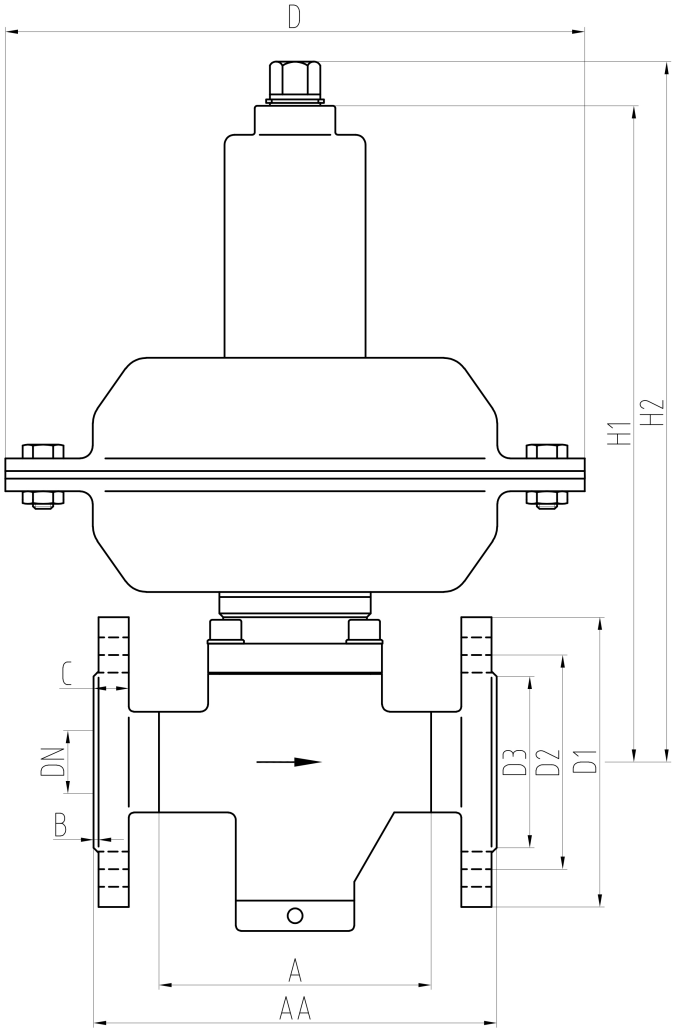

DN	½"	¾"	1"	15	20	25	15	20	25
Connection	Threaded			Flanged EN PN16/25			Flanged ANSI CL150		
Kv value	2	2.5	3.5	2	2.5	3.5	2	2.5	3.5
A or AA	108	108	108	130	150	160	184	184	184
H1	260 (290 for actuator D295)								
H2	280								
D1	-	-	-	95	105	115	89	98	108
D2	-	-	-	65	75	85	60.5	70	79.5
D3	-	-	-	45	58	68	35	43	51
B	-	-	-	16	16	16	12	12	12
C	-	-	-	2	2	2	2	2	2
D	175 – 230 – 295 – 350								
Nº holes	-	-	-	4	4	4	4	4	4
Ø hole	-	-	-	14	14	14	16	16	16
Weight (Kg)	8	8	8	10	10	10	11	11	11

All sizes in millimeters. Weight with actuator D230.