VALFONTA

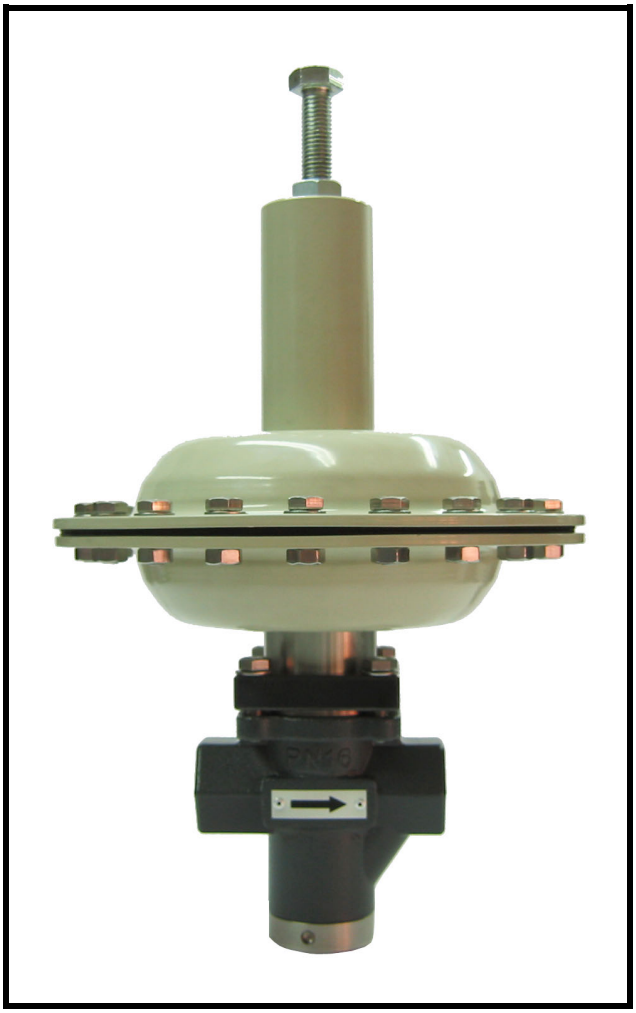

INSTRUCTIONS: OPERATION AND INSTALLATION

EXCESS VALVE MODEL PRV55

INDEX PAGE

1	IDENTIFICATION PLATE LEGEND	3
2	MAIN FEATURES	5
3	OPERATING	5
4	SCHEME	6
5	RECOMMENDED SPARE PARTS	7
6	ASSEMBLY	8
7	DIMENSIONS	11
8	DISMANTLING AND ASSEMBLING	12
9	RECEIPT ON SITE	13

1. IDENTIFICATION PLATE LEGEND

CE marked is NOT required in accordance with PED 2014/68/UE

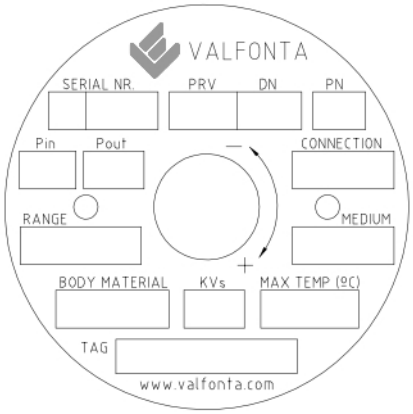

SERIAL N.	VALVE IDENTIFICATION NUMBER. VALFONTA WILL NEEDS THIS NUMBER FOR SPARE PARTS OR COMMENTS RESPECT OF THIS VALVE.
PRV	VALVE MODEL
DN	VALVE NOMINAL DIAMETER
PN	VALVE NOMINAL PRESSURE
P.IN	INLET PRESSURE (barg)
P.OUT	OUTLET PRESSURE (barg)
CONNECTION	VALVE CONNECTION
RANGE	OUTLET PRESSURE RANGE
MEDIUM	FLUID
BODY MAT.	BODY MATERIAL
KVs	SELECTED KV OF THE VALVE
MAX. TEMP(ºC)	DESIGN TEMPERATURE
TAG	CUSTOMER REFERENCE

ATEX marked required according to DIRECTIVE 94/9/EC

VALFONTA	**E 08915 – Badalona (ESPAÑA)**		
TYPE:	**EXCESS PRESSURE VALVES SELF - ACTUATED**		
MANUFACTURING YEAR:	**2014**	**MANUFACTURING NUMBER:**	
II 2 G D		**c IIC Tx** **c IIIC Tx°C**	
TECHNICAL FILE IN CUSTODY :	LOM	CERTIFICATION NUMBER:	LOM 14.034 U

Reference	Denomination
II 2	ATEX category, zones 1 & 21
G	Class I application (flammable liquids and gases)
D	Class II application (combustible dust)
c IIC	Safety construction protection mode for substances IIC
C IIIC	Safety construction protection mode for substances IIIC
Tx / Tx°C	Termal class according fluid temp. used
LOM	Number of certification from ExNB (LOM)

Special ATEX instructions
- No limitation of use due to the ATEX substance.
- Limitations due to thermal class:

Class I (flammable liquids and gases)

TEMPERATURE CLASS	MAX. SURFACE TEMPERATURE	APPROPRIATE FOR SUBSTANCES WITH IGNITION TEMPERATURE
T1	450°C	Ti >450°C
T2	300°C	Ti >300°C
T3	200°C	Ti >200°C
T4	135°C	Ti >135°C
T5	100°C	Ti >100°C
T6	85°C	Ti >85°C

- Class II (combustible dust)

$$T(x) \leq 2/3\ MIT_{cloud}$$

$$T(x) \leq 5\ mm\ MIT_{layer} - 75\ K$$

SELF-OPERATED PRESSURE REGULATORS
EXCESS PRESSURE VALVE MODEL PRV55

INSTRUCTIONS: OPERATION AND INSTALLATION

2. MAIN FEATURES

PRV55 model is a self-operated pressure excess valve, fully balanced.

Maintains line pressure to a stable requested value.

When upstream pressure rises above adjusted set point, the valve opens proportionally.

Easy to adjust and doesn't need any maintenance.

Maximum inlet pressure 16 bar.

Pressure range 0,01 a 8 barg.

Temperature range -10 to 180 ºC.

Fluids
Liquids and gases of group 1 and 2.
Steam, compressed air, nitrogen, fuel-oil, water, neutral gases, …

Body material	→ Stainless steel Aisi 316L → Bronze RG10 (*)
Trim material	→ Stainless steel Aisi 316L
Cover material	→ Stainless steel Aisi 316L
Connections	→ Threaded BSP → Flanges DIN or ANSI → Threaded NPT(*) → Clamp(*)

(*) consult

More common applications

Chemical laboratory installations, sanitary plants, compressed air, sprinkler systems, fuel-oil, steam, heat exchangers, steam plants, stills, chemical laboratories, cylinders and vulcanized, dry cleaner's, laundries,...

Characteristics

Easy to adjust, Doesn´t need any maintenance, internal design conceived to provide an effective circulation of the fluid, all the valves have been degreased.
Special Kv available.

3. OPERATING

The excess pressure valves PRV55 model work direct action principle.

Upstream pressure reaches the valve and moves the piston and seal assembly opening the valve. This pressure is fully balanced by the piston and in the pressure less state the valve is closed by the force of the regulating spring (28).

When upstream pressure arrives to the diaphragm via external control line (optionally internal), and rises above the adjusted set point, valve opens proportionally to the change in pressure.

It is recommended to leave between 0,5 and 1 meter until check valve for a better compensation.

To decrease outlet pressure, the regulating screw (30) is should be turn clockwise.

4. SCHEME

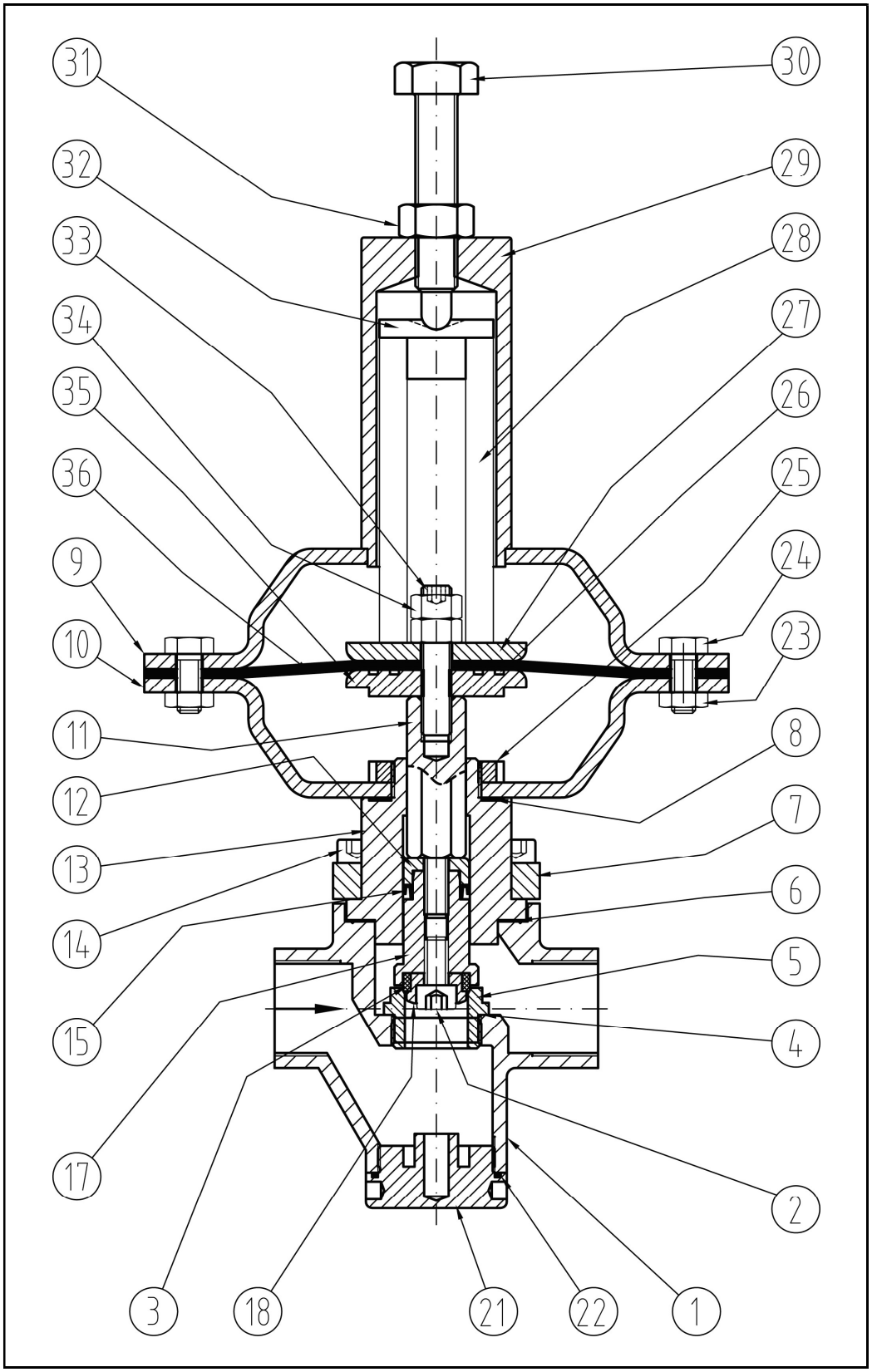
31
32
33
34
35
36
9
10
11
12
13
14
15
17
3
18
21
22
1
2
4
5
6
7
8
23
24
25
26
27
28
29
30

	Descripción	Material		Descripción	Material
1	Body	Stainless steel Aisi 316L	21	Lower Cover	Stainless steel 316L
	Seal screw	Stainless steel 316L	22	Gasket	Viton
3	Seal	Graphited PTFE	23	Nut	Stainless steel A-2
4	Gasket	PTFE	24	M8 Screw	Stainless steel A-2
5	Seat	Stainless steel 316L	25	Nut KM-6	Steel
6	Gasket	PTFE	26	O-ring	NBR / Vitón
	Valve cover	Steel 1.1141	27	Support spring	1.0035 sheet steel galvanized
8	Gasket	PTFE	28	Regulation spring	Spring steel 52SiCrNi5
9	Upper Actuator	1.0035 sheet steel epoxy painted	29	Spring cover	Steel 1.1191 Epoxy Painted
10	Lower Actuator	1.0035 sheet steel epoxy painted	30	Regulation screw	Galv. Steel 1.1191
11	Stem	Stainless steel 316L	31	Regulation nut	Galv. Steel 1.1191
12	Bushing Guide	Stainless steel 316L	32	Spring guide	Galv. Steel 1.1191
13	Guide Stem	Stainless steel 316L	33	Screw	Stainless steel A2-70
14	Allen screw	Stainless steel A2-70	34	Nut	Stainless steel A2-70
15	Gasket	Graphited PTFE	35	Lower support dia.	Stainless steel 316L
17	Stem and guide seal	Stainless steel 316L	36	Diaphragm	EPDM / EPDM+PTFE
18	Seal washer	Stainless steel 316L			
				Recommended spare parts	

5. RECOMMENDED SPARE PARTS

Reference	Description	Item
PRV55.SP1	Seal Kit and balancing system	2+3+11+12+15+17
PRV55.SP2	Gasket	6 + 22
PRV55.SP3	Springs	10 + 28
PRV55.SP4	Diaphragm EPDM + O-rings	26 + 36
PRV55.SP4	Diaphragm EPDM + Diaphragm PTFE + O-rings	26 + 36 + 36b

This device must be installed by specialized personnel with knowledge and experience. They must know about the current regulations in order to judge the risks that may involve this work.

Important: Be sure that the valve never exceeds the service temperature for which has been designed.

6. ASSEMBLY

The pipe must be cleaned carefully before installing the valve, to prevent that any small element or impurity may affect the reducing valve work.

It is also very important to install a strainer in front of the valve in order to protect it.

Excess pressure valve must be installed in a horizontal pipe and the direction of the flow should be in the same direction that shows the valve body.

When the steam is condensed, the pipe should be inclined to help with the evacuation.

Assembly Position

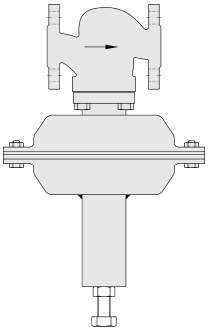

Standard position for any fluids and temperature above 0ºC .

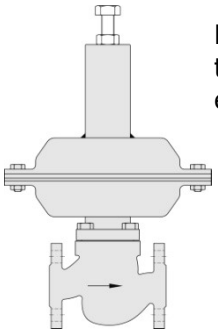

Position for gases and liquids when the temperature of the fluid does not exceed 80ºC

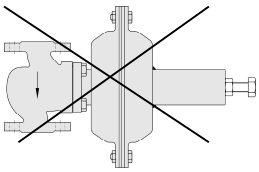

This situation is not allowed because the valve will not work properly.

The supports holding the valve will be done in the pipe and as close as possible to the flanges but never fixed in the valve or the actuator, to eliminate unnecessary tensions.

Installation in bypass

If you install a valve in bypass, which is highly recommended, with their isolation valves, according to the scheme:

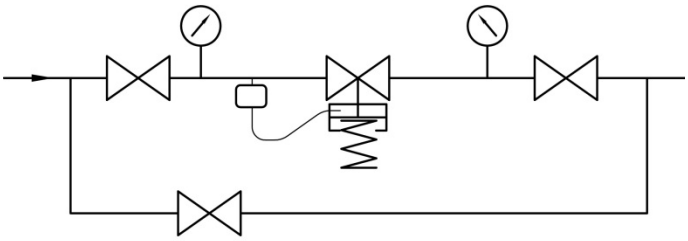

Control Line

Pressure reducing valve will be supplied with internal control line, so external control line is not strictly necessary.

However, if customer requires with order or in case of steam the control line must be connected to the main pipeline in downstream pressure, **at least 1 meter from the valve**, through a tube (10 x 1 mm).

If the upstream pressure has oscillations, it is recommended to install a needle valve in the control line.

External control line it's necessary for liquids with temperatures above 125ºC and steam, and recommended for liquids below 125ºC.
For gases isn't necessary because valve mounts the internal control line.

Condensating Pot

The Condensating Pot will be only necessary for liquids with temperatures above 125ºC and steam, in order to protect the diaphragm from overheating. The pot is always in the highest place of the pipe.

The connection of the control line of the pot to the main pipe will be made laterally to the center of it and with a slight slope to slide into the pipe.

All the connections of the actuator and the condensating pot are for a 10x1 tube.

The condesanting pot should be filled with water to overflowing.

If the connection of the control line is located below the outlet flange, the condenser pot installation should be according to the following scheme:

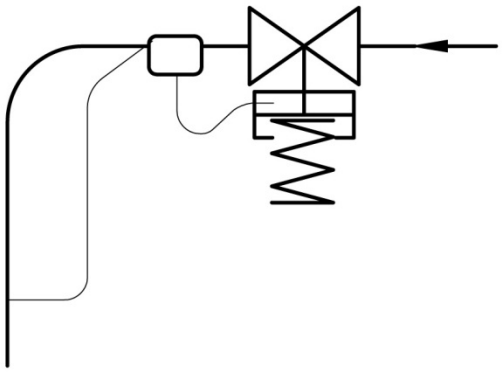

If the control line connection is placed over the outlet flange, the condenser pot must be installed according to this scheme:

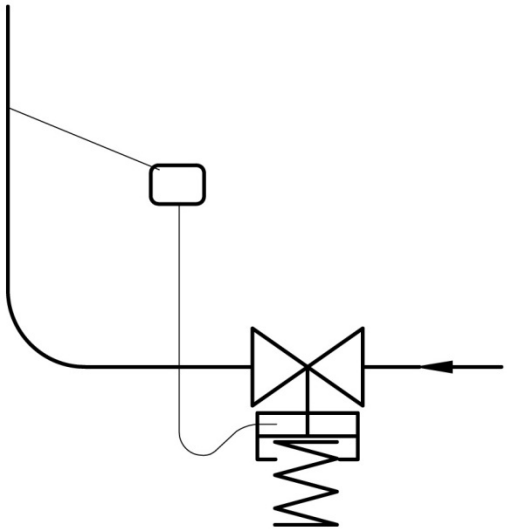

7.5 Start-up

If the steam or liquid flows over 125 º C is necessary to install and fill with water the condensating pot. Screw the cap and tight it.

Open the check valves slowly (to prevent water hammer).

To adjust the set pressure (upstream pressure), turn the regulating screw. Compressing the spring (clockwise) decreases the set pressure and decompressing the spring, increases.

ATEX requirements

- **IMPORTANT!** The respective national regulations as well as general engineering rules governing the installation and operation of equipment in explosive atmospheres must be observed.

- The valves are ATEX category "II 2 GD" according to 100a ATEX Directive (94/9/EC).

- **IMPORTANT!** The device can only be used in potentially explosive locations Class I (gases, vapors or liquids) Zones 1 and 2 and Class II (combustible dusts) areas 21 and 22, according to the specifications in the Directive 1999/92/EC , as well as the Electro technical Regulations.

Electrostatic discharges

Under certain conditions, electrostatic discharges that are capable of ignite explosive atmospheres, can be produced. The most important measure of protection is equipotential bonding of all conductive parts and earthing.

In order to avoid electrostatics discharges, the installation of devices and control elements must be earthing.

- **IMPORTANT!** Connecting the valves to process: it should be ensured electrical continuity of $<10^6\Omega$.

- **IMPORTANT!** National regulations on maintenance, service, inspection and repair of apparatus and equipment for explosive atmospheres, as well as general engineering rules must be observed.

COMMISSIONING

IMPORTANT! User is the only responsible for a safe use of the devices.

In use, parts that affect the explosion protection of the valves must be checked and act accordingly, f.e.:

- Fixing Elements -screws, nuts, shafts, etc.- see technical documentation of the product supplied. It must be ensure its tightening, proper operation and / or change when necessary. After 2.500h of working or 6 natural months (whichever comes first).
- The seals will be replaced by original spare parts: every 25,000 hours or when periodic inspections result said (the lower range).

- Any other action arising from inspection and maintenance plan, set by the user

- **IMPORTANT!** If repainting the valves and / or spare parts, ensure there is no paint on moving parts, mounting flange and closure sealing.

INSPECTIONS

- **IMPORTANT!** National Regulations must be observed. It is user's responsibility to establish an inspection and maintenance plan for these devices in order to ensure their proper use.
- Inspections must be performed by "qualified staff" because of the kind of equipment and / or installation.
- Purposes can be used to guide the requirements of the UNE-EN 60079-17, in order to establish the inspection plan.
- **IMPORTANT!** When inspections are "Detailed" or it is degree is "Close", the devices will be completely shut out.

MAINTENANCE

Spare parts are subject to normal wear. They must be inspected and replaced when necessary.

The frequency of the inspections and maintenance depends on the severity of the service conditions. This section provides instructions about replacement, packing, stem, plug and seat.

All maintenance operations can be performed with the valve body installed.

Before any maintenance, ensure the valve is depressurised and clear of media, and isolate it both upstream and downstream. Be sure the temperature isn't dangerous.

IMPORTANT! Use only genuine parts or recommended by VALFONTA, SL

7. DIMENSIONS

Pressure Range and actuator size

D (mm)	Range	units
350	consult	mbar
295	10 – 200	mbar
230	100 – 1000	mbar
230	0,5 – 2	bar
175	1 – 4	bar
175	3 – 8	bar

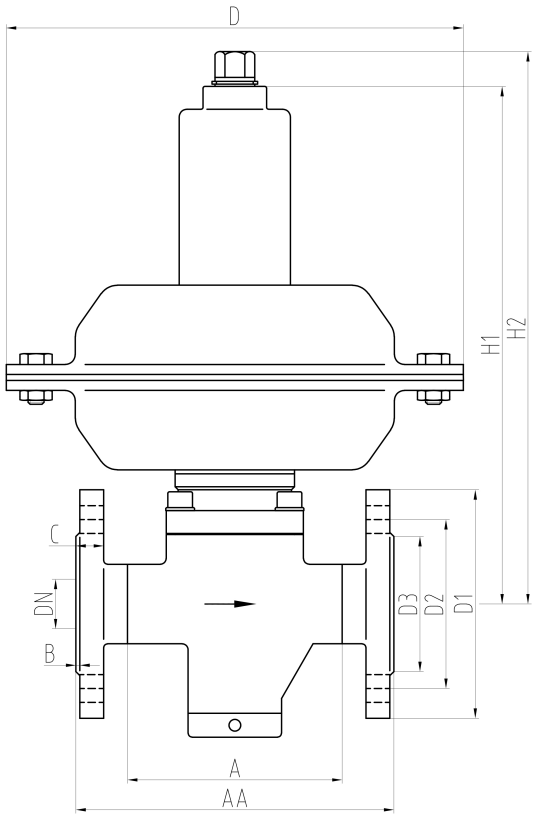

DN	½"	¾"	1"	15	20	25	15	20	25
Connection	Threaded			Flanged EN PN16/25			Flanged ANSI CL150		
Kv value	2	2.5	3.5	2	2.5	3.5	2	2.5	3.5
A or AA	108	108	108	130	150	160	184	184	184
H1	258								
H2	320								
D1	-	-	-	95	105	115	89	98	108
D2	-	-	-	65	75	85	60.5	70	79.5
D3	-	-	-	45	58	68	35	43	51
B	-	-	-	16	16	16	12	12	12
C	-	-	-	2	2	2	2	2	2
D	175 – 195 – 230 – 295 – 350 (Depends outlet pressure)								
Nº holes	-	-	-	4	4	4	4	4	4
Ø hole	-	-	-	14	14	14	16	16	16
Weight (Kg)	2.5	2.5	2.5	5	5	5	5	5	5

8. DISMANTLING AND ASSEMBLING

a. Unscrew completely the adjusting nut (item 31) and screw (30) to loosen the spring.
b. Ensure that there is no pressure in the pipe line and the temperature of valve and pipe is ambient.
c. Remove and clean control line (internal control line, it's not necessary).
d. Unscrew bolts (24) and nuts (23).
e. Remove upper actuator (9) and regulation spring (28). If necessary, replace diaphragm (36):
    i. Unscrew nuts (34) with a wrench, when we fasten the screw (33) with an allen wrench.
    ii. Lift the cover (27) and replace diaphragm (36) and reassemble.
f. Unscrew bolt group (33)-diaphragm support (35) anticlockwise direction, fasten the stem (11).
g. Unscrew and replace nut (25) (or M8 bolts in new models) with special tool to prevent the damage and lift the actuator (10).
h. Unscrew cover bolts (14) and we lift the guide (13).
i. Lift and replace, if necessary, cover-body gasket (6).
j. With a special tool (request to VALFONTA a drawing) unscrew seal (5) and remove rest of valve parts.
k. In a workbench replace seat (3) and compensating gasket (15) if necessary.
l. Check the seal to assure is not damaged.
m. Clean and reassembly.

9. RECEIPT ON SITE

ATENTION! Transport and storage of these devices should be in their original packaging.

RECEIPT ONSITE

When receiving the equipment on site, it should be unpacked to check that they agree with the request and delivery notes. At least, verification shall be performed:
- Visual,
- Mechanical

After these checks, if it will not be installed immediately, it will keep in dry and protected atmosphere.

Visual Inspection

Check that during transport, unloading and installation, the devices have not been damaged.

Mechanical Verification

Check all moving parts of the apparatus, as well as screws and other elements fulfill their mission.

IMPORTANT! If is observed abnormality during these guidelines reception, contact urgently VALFONTA to clarify responsibilities and put the devices in correct status.

The contents of that document are subject to change without notice.